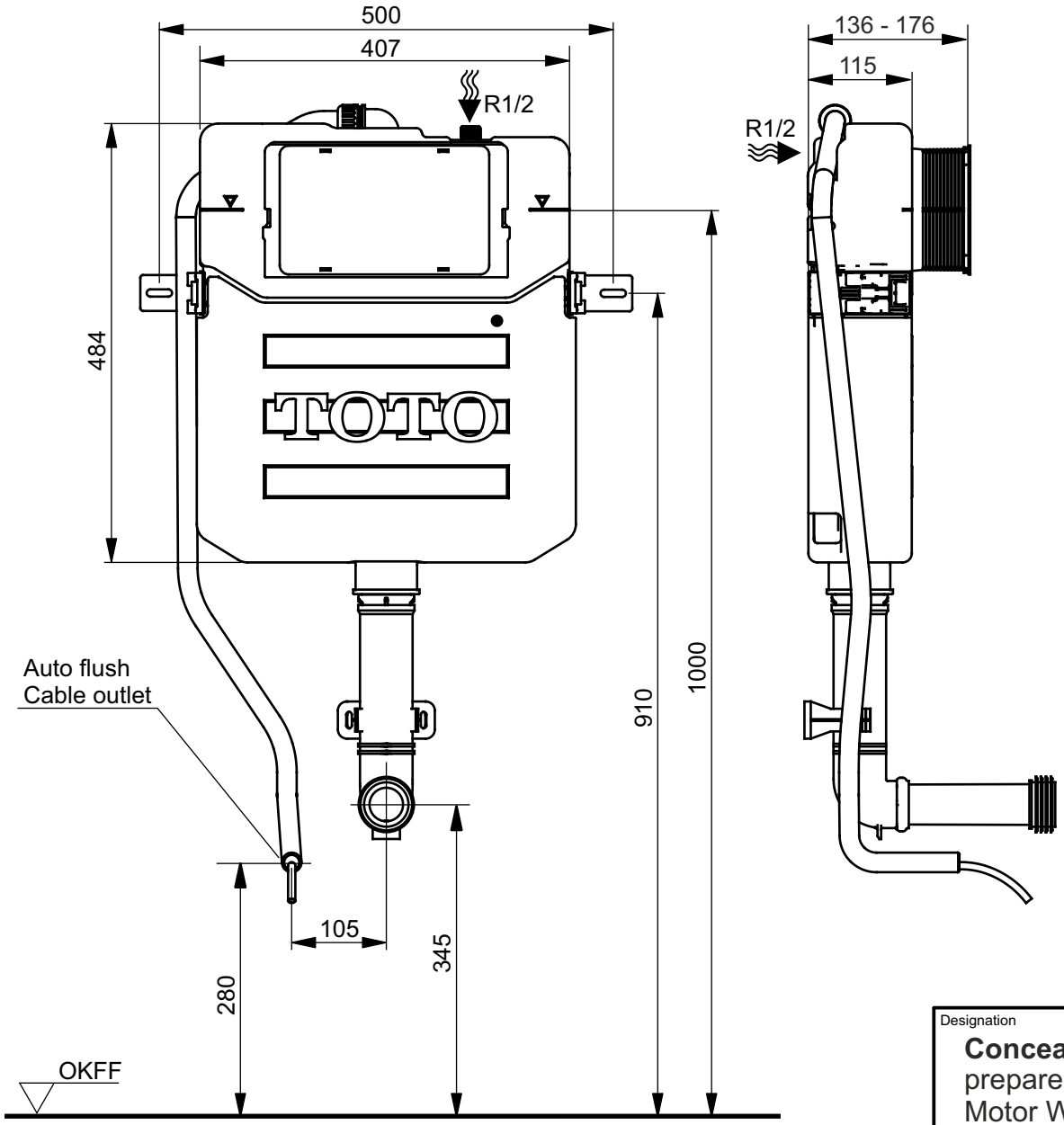

TO BE COMBINED WITH:

1. Push Plate MB175M#SS (brushed stainless steel)
   MB175M#B (matte black)
   MB175M#W (matte white)

CAN BE COMBINED WITH:

1. WC RP, back-to-wall, floor-standing CW563Y#XW
2. Auto Flush Motor incl. connection cable to WASHLET® HM184
   (WASHLET® with Auto Flush required)

Designation

Concealed Cistern
prepared for Auto Flush
Motor WH183ETNF

TOTO

Altered		Scale	1:7.5
		Signed	T.G.
		Date	22/01/2026

This drawing including the respective data may neither be duplicated nor modified nor altered without the consent of TOTO Europe GmbH. The usage of the data/technical drawings takes place at user's own risk and under exclusion of any liability of TOTO Europe GmbH and/or of the companies of the TOTO-Group. The indicated dimensions are not binding; products are subject to change. Measurements shown may be subject to small variations or are indicative.