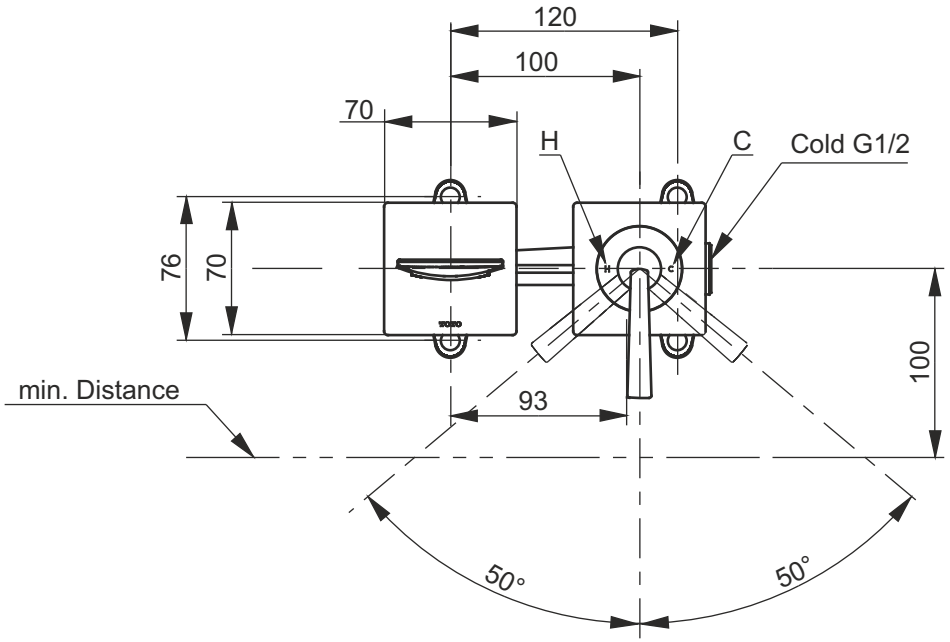

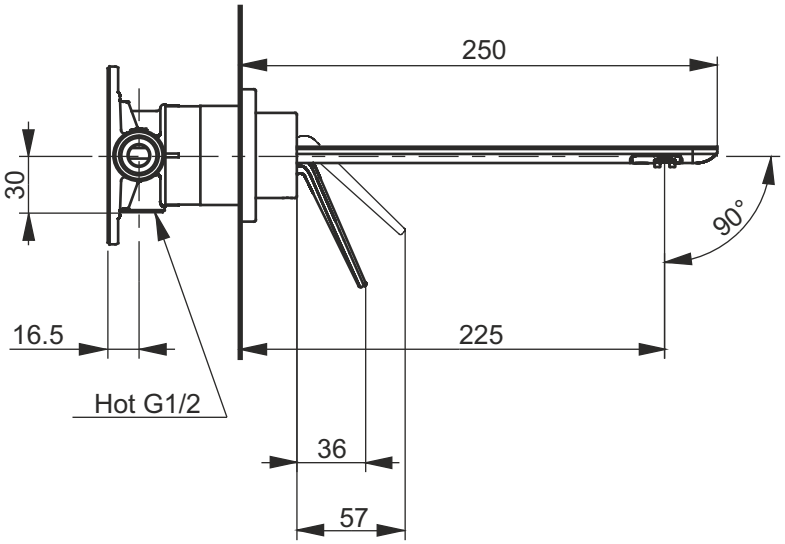

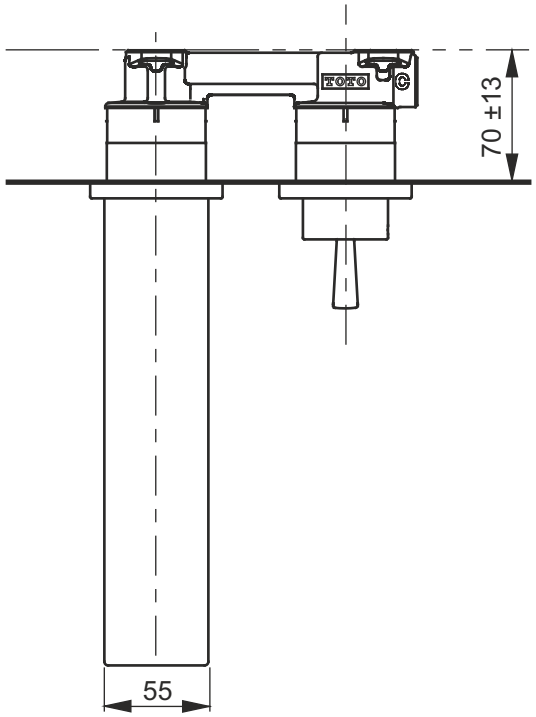

Designation

FAUCETS

2 tap hole single lever basin mixer ZL, concealed, projection 225 mm TLP02310EA

TOTO

Altered		Scale	1:4
		Signed	T.G.
		Date	03-09-2021

This drawing including the respective data may neither be duplicated nor modified nor altered without the consent of TOTO Europe GmbH. The usage of the data/technical drawings takes place at user's own risk and under exclusion of any liability of TOTO Europe GmbH and/or of the companies of the TOTO-Group. The indicated dimensions are not binding; products are subject to change. Measurements shown may be subject to small variations or are indicative.