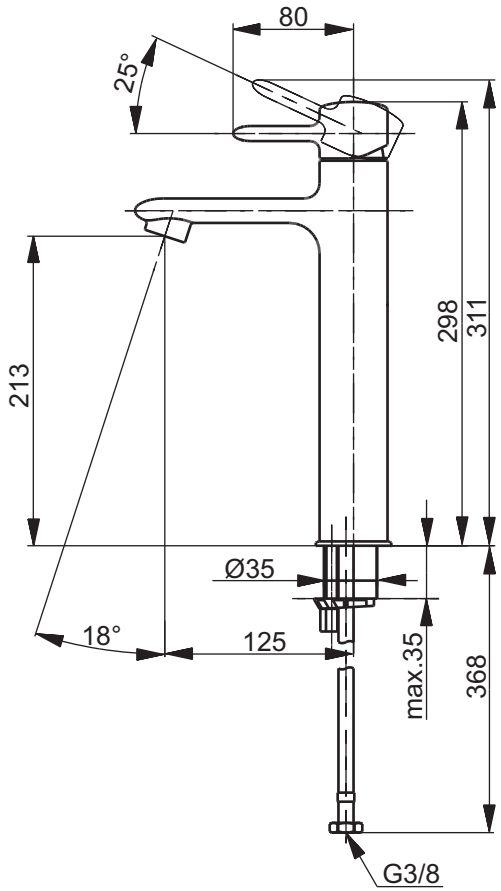

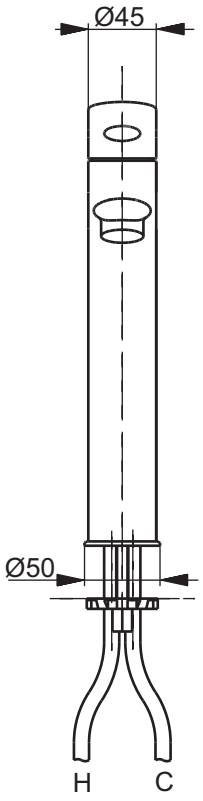

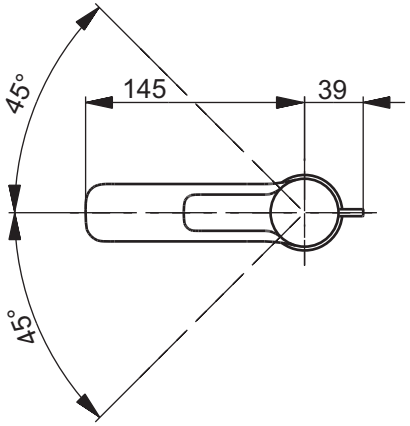

Designation

NC SERIES

Single lever vessel mixer without drain rod VL10623C

TOTO

Altered		Scale	1:5
		Signed	T.G.
		Date	16/12/2014

This drawing including the respective data may neither be duplicated nor modified nor altered without the consent of TOTO Europe GmbH. The usage of the data/technical drawings takes place at user's own risk and under exclusion of any liability of TOTO Europe GmbH and/or of the companies of the TOTO-Group. The indicated dimensions are not binding; products are subject to change. Measurements shown may be subject to small variations or are indicative.